GPT048N10NNC

100V N-Channel MOSFET

Product Summary

$V_{(BR)DSS}$	$R_{DS(on)TYP}$	I_D
100V	4.8mΩ@10V	115A

PDFN5X6-8L

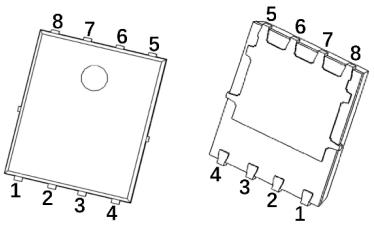

Schematic diagram

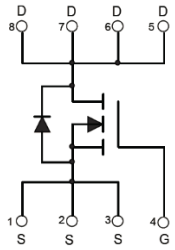

Feature

- Split Gate Trench Technology
- Low $R_{DS(ON)}$
- Low Gate Charge
- Low Gate Resistance
- 100% UIS Tested

Application

- Load Switch
- PWM Application
- Power Management

Package Marking and Ordering Information

Part Number	Package	Marking	Packing	Reel Size	Tape Width	Qty
GPT048N10NNC	PDFN5X6-8L	T048N10N	Reel & Tape	330mm	12mm`	5000pcs

ABSOLUTE MAXIMUM RATINGS (T_A = 25℃ unless otherwise noted)

Parameter		Symbol	Value	Unit
Drain-Source Voltage		V_{DS}	100	V
Gate-Source Voltage		V_{GS}	±20	V
Continuous Drain Current[1]	T_C = 25℃	I_D	115	A
	T_C = 100℃	I_D	71	A
Pulsed Drain Current[2]		I_{DM}	460	A
Single Pulsed Avalanche Current[3]		I_{AS}	45	A
Single Pulsed Avalanche Energy[3]		E_{AS}	506	mJ
Power Dissipation[5]	T_C = 25℃	P_D	156	W
Thermal Resistance from Junction to Ambient[6]		$R_{\theta JA}$	77	℃/W
Thermal Resistance from Junction to Case		$R_{\theta JC}$	0.8	℃/W
Operating Junction and Storage Temperature Range		T_J, T_{STG}	-55~ +150	℃

MOSFET ELECTRICAL CHARACTERISTICS (T_A = 25°C unless otherwise noted)

Parameter	Symbol	Test Condition	Min	Type	Max	Unit
Off Characteristics						
Drain-Source Breakdown Voltage	$V_{(BR)DSS}$	V_{GS} = 0V, I_D = 250μA	100			V
Zero Gate Voltage Drain Current	I_{DSS}	V_{DS} = 100V, V_{GS} = 0V			1	μA
Gate-Body Leakage Current	I_{GSS}	V_{GS} = ±20V, V_{DS} = 0V			±100	nA
On Characteristics[4]						
Gate Threshold Voltage	$V_{GS(th)}$	V_{DS} = V_{GS}, I_D = 250μA	2.0	3.0	4.0	V
Drain-Source On-Resistance	$R_{DS(on)}$	V_{GS} = 10V, I_D = 20A		4.8	6.0	mΩ
Dynamic Characteristics						
Input Capacitance	C_{iss}	V_{DS} = 50V, V_{GS} = 0V, f = 1MHz		3825		pF
Output Capacitance	C_{oss}			609		
Reverse Transfer Capacitance	C_{rss}			12		
Gate Resistance	R_g	V_{DS} = 0V, V_{GS} = 0V, f = 1MHz		2.5		Ω
Switching Characteristics						
Total Gate Charge	Q_g	V_{DS} = 50V, V_{GS} = 10V, I_D = 20A		62		nC
Gate-Source Charge	Q_{gs}			19		
Gate-Drain Charge	Q_{gd}			16		
Turn-On Delay Time	$t_{d(on)}$	V_{DD} = 50V, V_{GS} = 10V, I_D = 20A, R_G = 6.2Ω		21		ns
Turn-On Rise Time	t_r			26		
Turn-Off Delay Time	$t_{d(off)}$			46		
Turn-Off Fall Time	t_f			23		
Source - Drain Diode Characteristics						
Diode Forward Voltage[4]	V_{SD}	V_{GS} = 0V, I_S = 20A			1.2	V
Diode Continuous Forward Current[1]	I_S	T_C = 25°C			115	A
Diode Reverse Recovery Time	t_{rr}	I_F = 20A, dI/dt = 100A/μs		62		ns
Diode Reverse Recovery Charge	Q_{rr}			131		nC

Notes :

1.The maximum current rating is limited by package. And device mounted on a large heatsink.

2.Pulse Test: Pulse Width ≤ 10μs, duty cycle ≤ 1%.

3.E_{AS} condition: V_{DD} = 50V, V_{GS} = 10V, L = 0.5mH, R_G = 25Ω Starting T_J = 25°C.

4.Pulse Test: Pulse Width ≤ 300μs, duty cycle ≤ 2%.

5.The power dissipation P_D is limited by $T_{J(MAX)}$ = 150°C. And device mounted on a large heatsink.

6.Device mounted on 1in^2 FR-4 board with 2oz. Copper, in a still air environment with T_A = 25°C.

Typical Characteristics

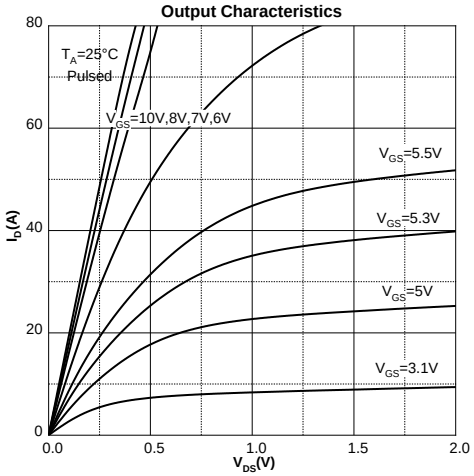

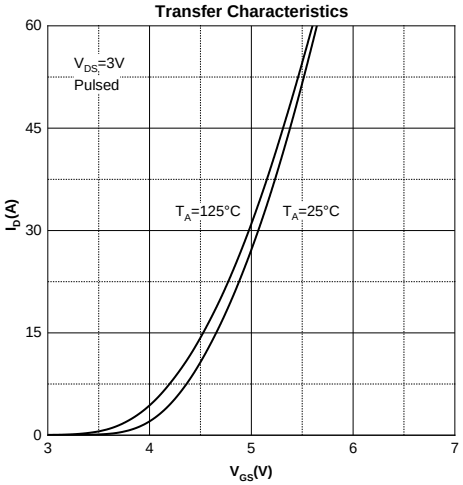

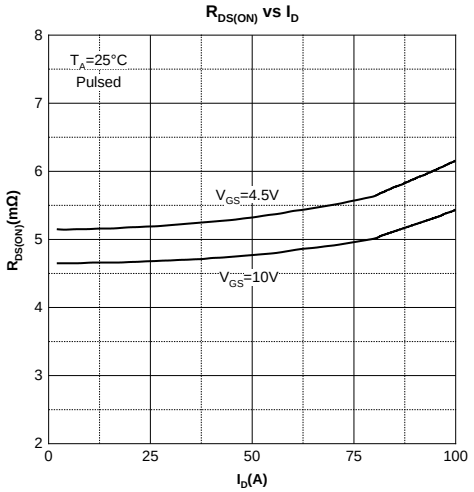

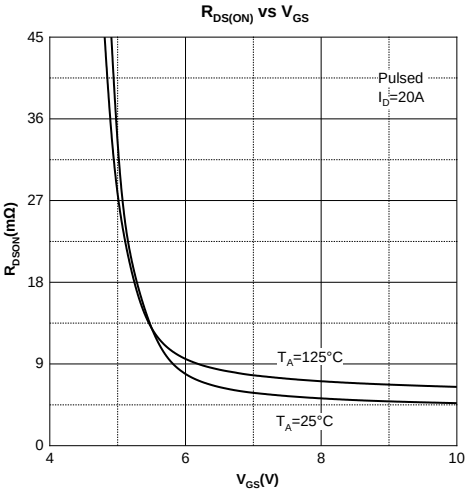

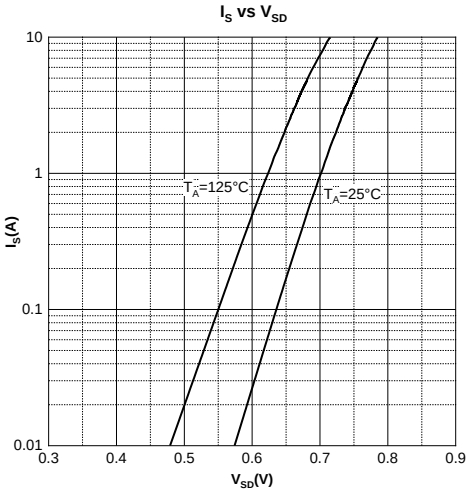

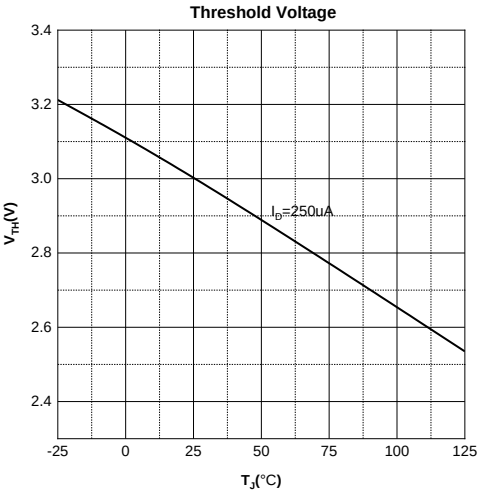

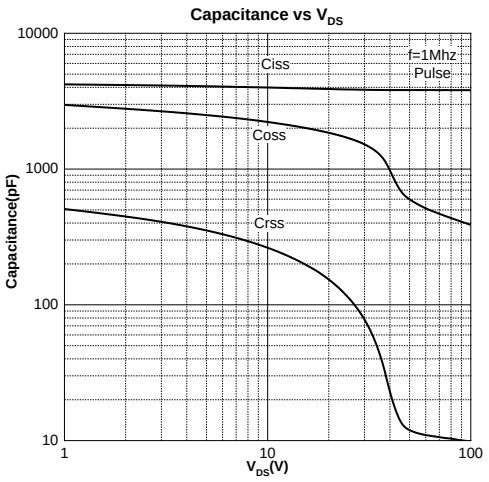
Capacitance vs V_{DS}
Ciss
Coss
Crss
f=1Mhz
Pulse
Capacitance(pF)
V_{DS}(V)
10000
1000
100
10
1
10
100

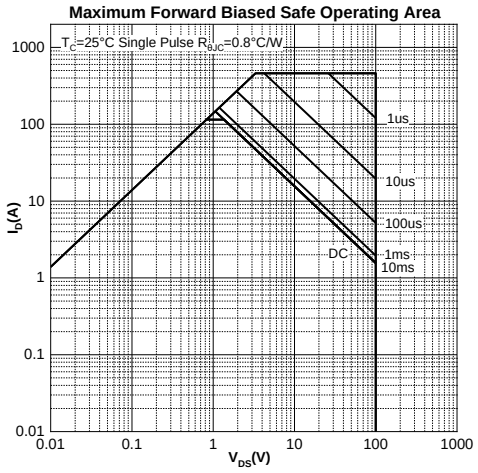
Maximum Forward Biased Safe Operating Area
T_C=25°C Single Pulse $R_{\theta JC}$=0.8°C/W
1us
10us
100us
1ms
10ms
DC
I_D(A)
V_{DS}(V)
1000
100
10
1
0.1
0.01
0.01
0.1
1
10
100
1000

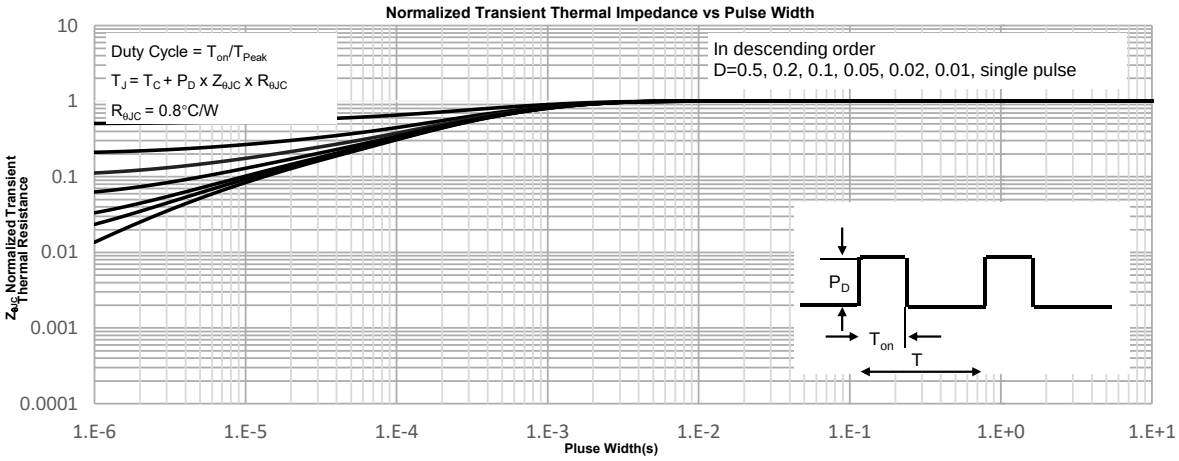
Normalized Transient Thermal Impedance vs Pulse Width
Duty Cycle = T_{on}/T_{Peak}
$T_J = T_C + P_D \times Z_{\theta JC} \times R_{\theta JC}$
$R_{\theta JC}$ = 0.8°C/W
In descending order
D=0.5, 0.2, 0.1, 0.05, 0.02, 0.01, single pulse
P_D
T_{on}
T
$Z_{\theta JC}$ Normalized Transient Thermal Resistance
Pluse Width(s)
10
1
0.1
0.01
0.001
0.0001
1.E-6
1.E-5
1.E-4
1.E-3
1.E-2
1.E-1
1.E+0
1.E+1

Test Circuit

Gate Charge Test Circuit & Waveform

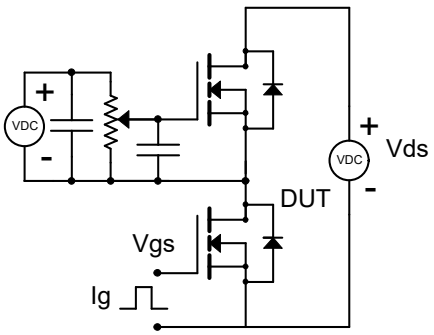

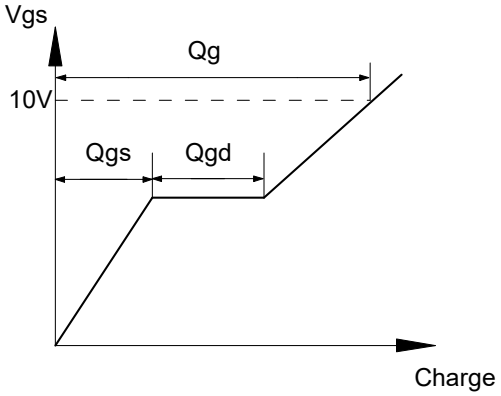

Resistive Switching Test Circuit & Waveform

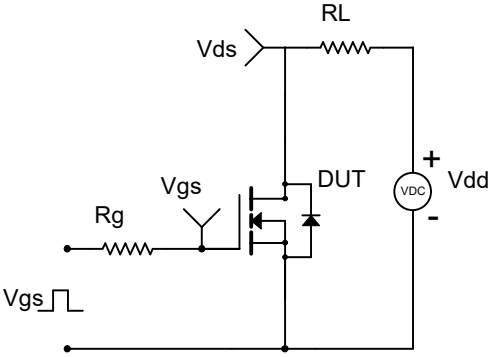

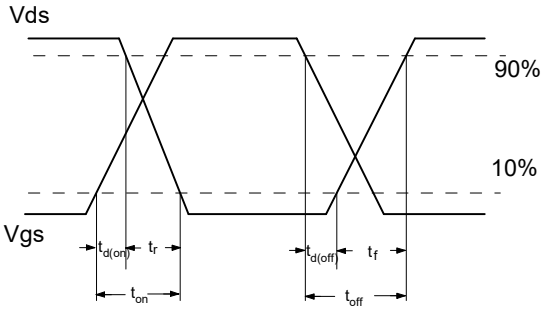

Unclamped Inductive Switching (UIS) Test Circuit & Waveforms

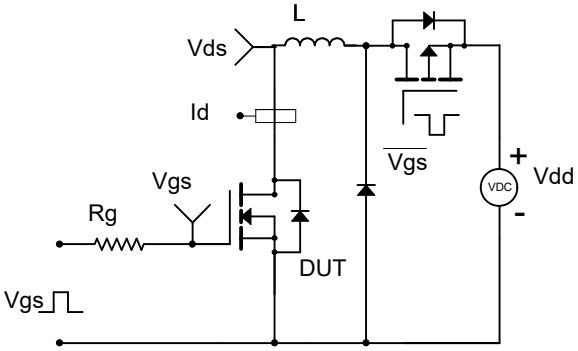

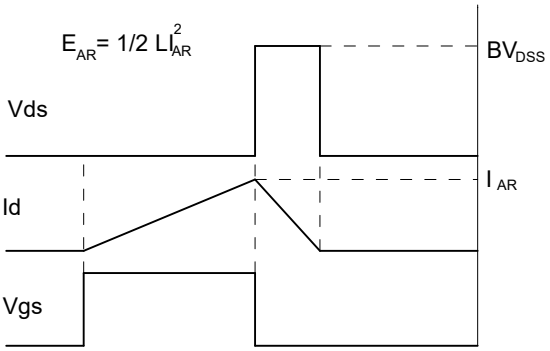

PDFN5X6-8L Package Information

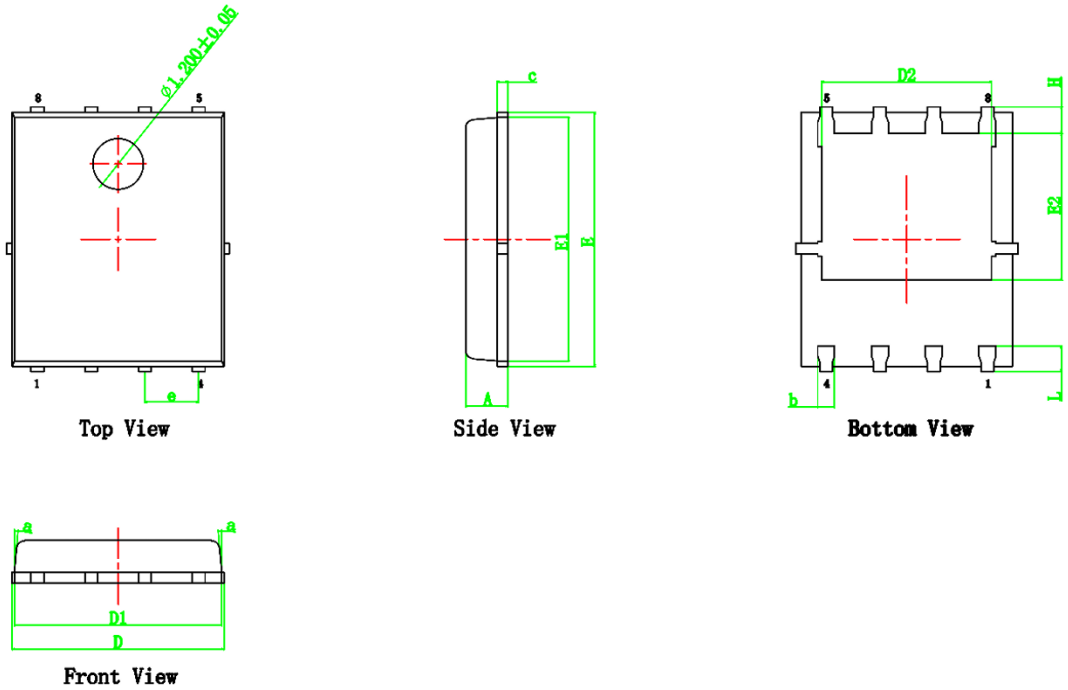

Symbol	Dimensions In Millimeters		Dimensions In Inches	
	Min.	Max.	Min.	Max.
A	0.900	1.200	0.035	0.047
b	0.330	0.510	0.013	0.020
c	0.190	0.300	0.007	0.012
D	4.800	5.220	0.189	0.210
D2	3.900	4.300	0.154	0.170
E	5.900	6.100	0.232	0.240
E1	5.700	5.800	0.224	0.228
E2	3.350	3.750	0.132	0.148
e	1.270REF		0.050REF	
H	0.350	0.720	0.014	0.028
D1	4.800	5.000	0.189	0.197
L	0.350	0.750	0.014	0.030
a	0°	12°	0°	12°

Attention：

- GreenPower Electronics reserves the right to improve product design function and reliability without notice.
- Any and all semiconductor products have certain probability to fail or malfunction, which may result in personal injury, death or property damage. Customer are solely responsible for providing adequate safe measures when design their systems.
- GreenPower Electronics products belong to consumer electronics or other civilian electronic products.